Azmari Sultana

Fall2025 (A)

① a) Moore type FSM

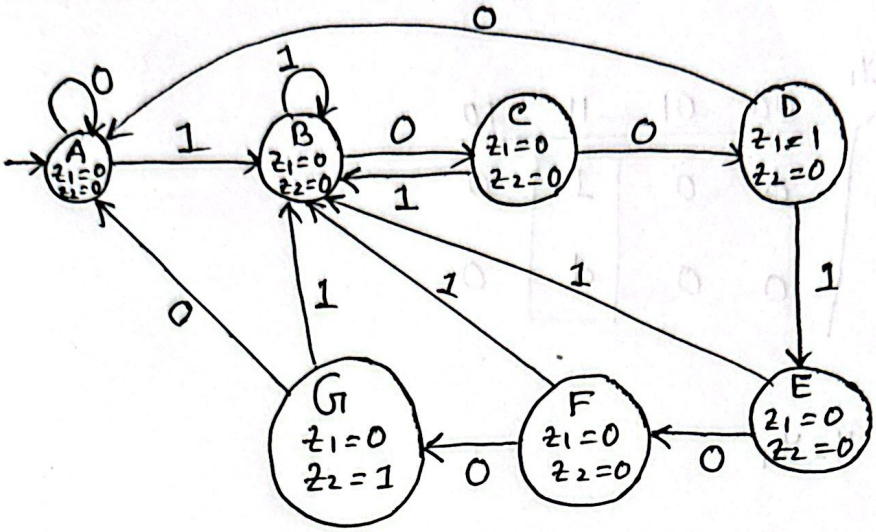

Number of flip flop = $\log_2(7) = 3$

b)

Present state $y_3y_2y_1$	next state $Y_3Y_2Y_1$ $w=0$	$w=1$	Output, z z_1z_2
A (000)	A (000)	B (001)	00
B (001)	C (010)	B (001)	00
C (010)	D (011)	B (001)	00
D (011)	A (000)	E (100)	10
E (100)	F (101)	B (001)	00
F (101)	G (110)	B (001)	00
G (110)	A (000)	B (001)	01
(111)	d	d	dd

Scanned with CamScanner

c) $\underline{z_1}$

y_3 \ y_2y_1	00	01	11	10
0	0	0	1	0
1	0	0	d	0

$z_1 = y_2 y_1$

$\underline{z_2}$

y_3 \ y_2y_1	00	01	11	10
0	0	0	0	0
1	0	0	d	1

$z_2 = y_3 y_2$

Scanned with CamScanner

② a) Mealy type FSM

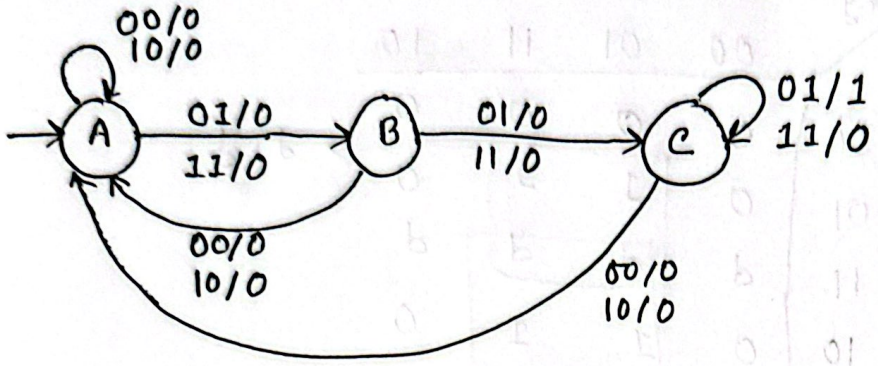

b)

Present state $y_2 y_1$	next state $Y_2 Y_1$				output, z			
	00	01	10	11	00	01	10	11
A (00)	A (00)	B (01)	A (00)	B (01)	0	0	0	0
B (01)	A (00)	C (10)	A (00)	C (10)	0	0	0	0
C (10)	A (00)	C (10)	A (00)	C (10)	0	1	0	0
~~B~~ (11)	d	d	d	d	d	d	d	d

Scanned with CamScanner

c) Y_2

y_2y_1 \ xy	00	01	11	10
00	0	0	0	0
01	0	1	1	0
11	d	d	d	d
10	0	1	1	0

$\rightarrow y_1 y$

$\rightarrow y_2 y$

$$Y_2 = y_1 y + y_2 y$$

Y_1

y_2y_1 \ xy	00	01	11	10
00	0	1	1	0
01	0	0	0	0
11	d	d	d	d
10	0	0	0	0

$\rightarrow \bar{y}_2 \bar{y}_1 y$

$$Y_1 = \bar{y}_2 \bar{y}_1 y$$

z

y_2y_1 \ xy	00	01	11	10
00	0	0	0	0
01	0	0	0	0
11	d	d	d	d
10	0	1	0	0

$\rightarrow y_2 \bar{x} y$

$$z = y_2 \bar{x} y$$

Scanned with CamScanner

③ a)

(i) Truth table :

S_1	S_0	Output
0	0	I_0
0	1	I_1
1	0	I_2
1	1	I_3

Output logic function:

$$Y = \overline{S_1}\,\overline{S_0}\,I_0 + \overline{S_1}\,S_0\,I_1 + S_1\,\overline{S_0}\,I_2 + S_1\,S_0\,I_3$$

(ii)

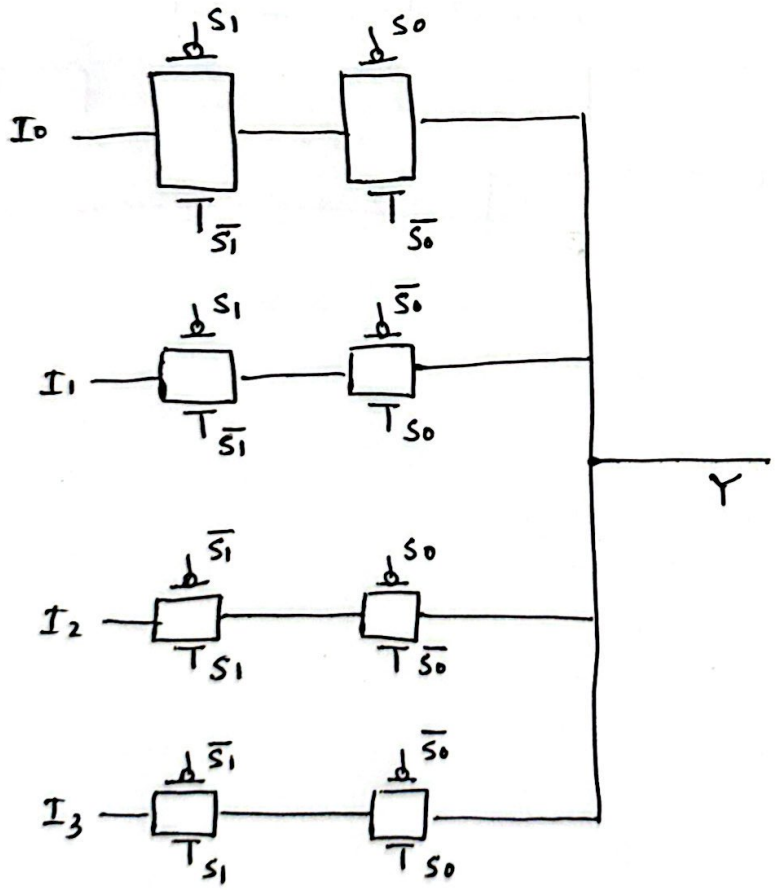

(iii) Transistor needed in transmission gate = 4 X 4 = 16

In CMOS,

3 input AND gate

= 3 + 3 + 2 = 8

4 AND gate = 8 X 4

= 32

4 input or gate

= 4 + 4 + 2

= 10

Total = 32 + 10

= 42

CMOS needed

= 42 − 16

= 26 more transistors

Scanned with CamScanner

b) i)

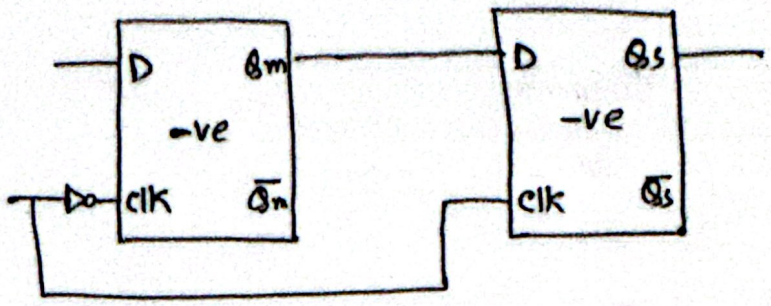

Fig: Negative edge D flip-flop

(ii)

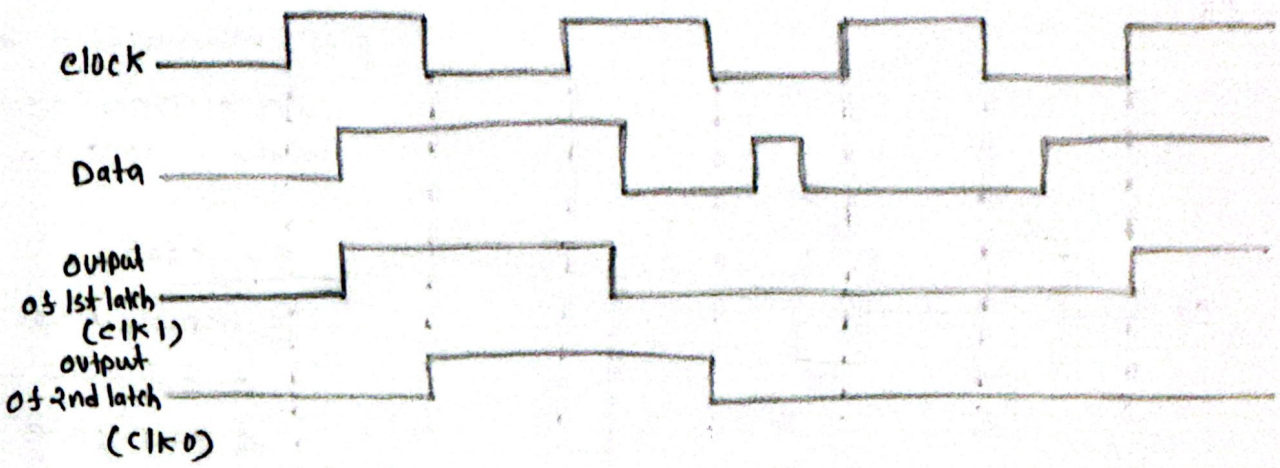

Scanned with CamScanner

e)

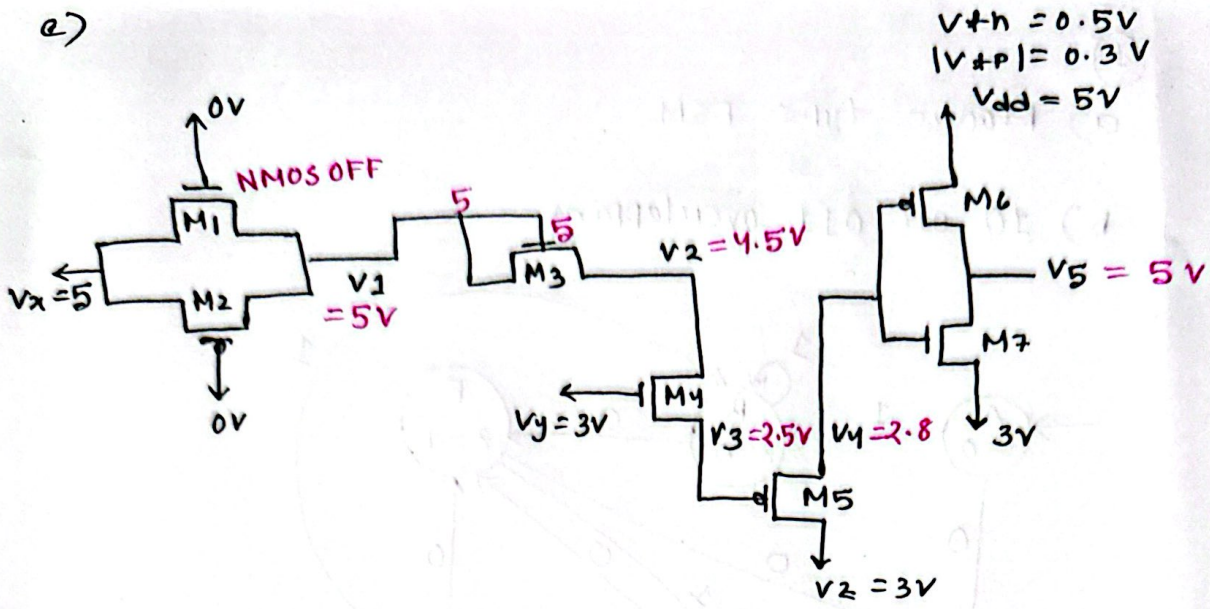

M3

$V_{GS} > V_{th}$

$\Rightarrow 5 - V_S > 0.5$

$\Rightarrow V_S \leq 4.5$

M4

$V_{GS} > V_{th}$

$\Rightarrow 3 - V_S > 0.5$

$\Rightarrow V_S \leq 2.5$

M5

$V_{SG} \geq V_{tp}$

$\Rightarrow V_S - 2.5 \geq 0.3$

$\Rightarrow V_S \leq 2.8$

Azmani

Scanned with CamScanner